INSIDE RING HOLDER ASSEMBLY FOR VISES

INSTRUCTIONS:
Insert the bolt through the mandrel cone and place into the tapered end of the mandrel you have selected. (See Illustration) Position ring on the selected mandrel. Turn the bolt into the ring holder frame with the supplied wrench until the ring is snug.

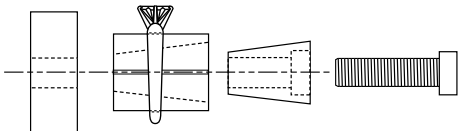

NOTE: Mandrel CONE Taper fits into Mandrel Taper

MANDREL

Select the mandrel which is slightly smaller than the inside ring diameter.

#004-170	.575”
#004-171	.625”
#004-172	.675”
#004-173	.725”
#004-174	.775”
#004-216	.825”
#004-217	.875”

DO NOT OVER TIGHTEN
Damage may occur to the ring being held.

#004-679
Complete Assembly

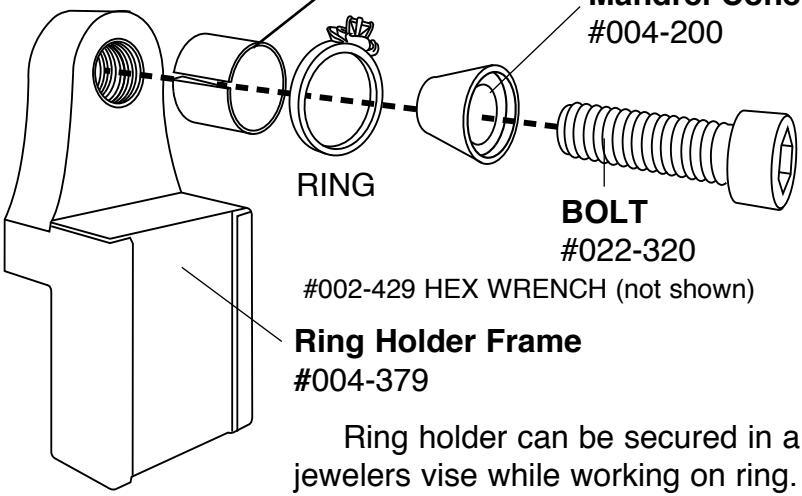

Ring holder can be secured in a jewelers vise while working on ring.

900 Overlander Road • Emporia, KS 66801 USA
800-835-3519 • 620-343-9640 • Fax: 620-343-9640
glendo@glendo.com • www.grstools.com
Last Updated: 2014-12-16 LIT-074

EXTRA SET OF MANDRELS FOR LARGE RINGS

PART #004-616

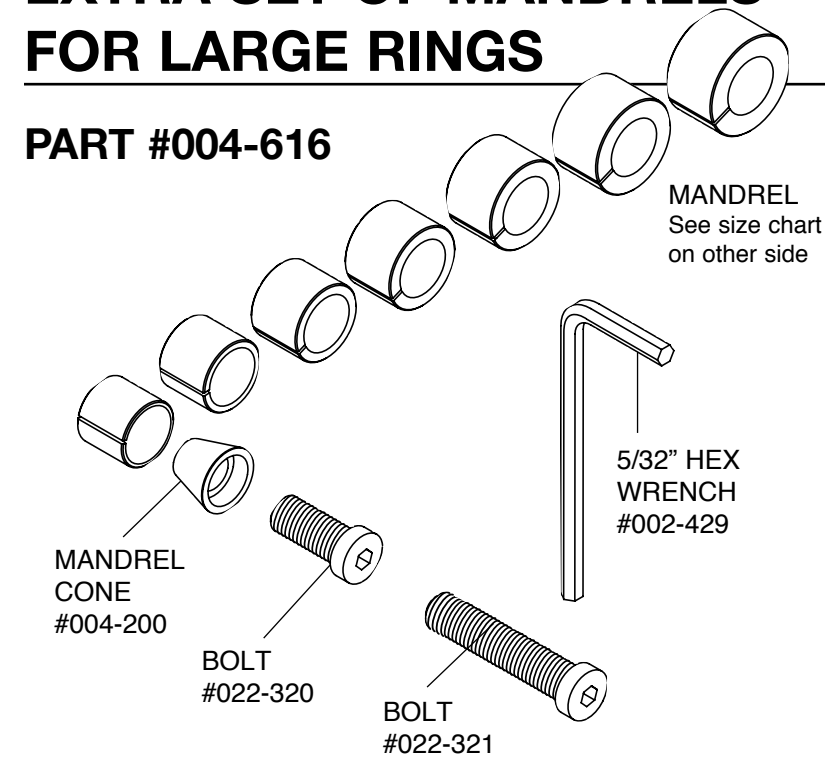

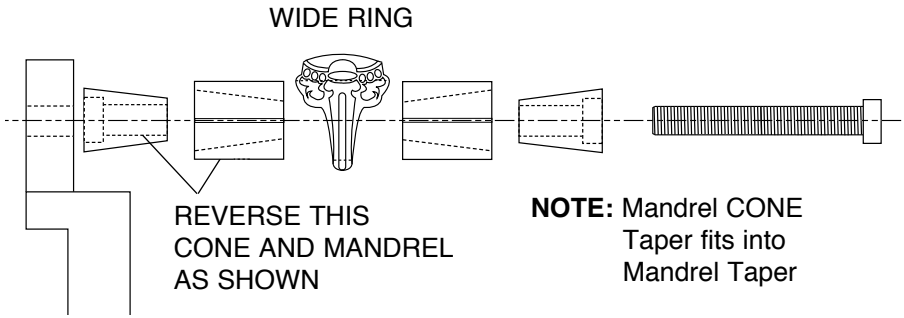

To hold large / wide rings use TWO of the SAME SIZE mandrels and TWO mandrel cones. Insert the long bolt through the first mandrel cone and place cone into the tapered end of the mandrel you have selected. Then reverse the second mandrel and place on bolt. Slide the second cone into that mandrel so that the taper angles match. (See Illustration above) Position ring on the selected mandrel. Tighten the socket head screw into the Ring Post with the supplied wrench until the ring is snug.

DO NOT OVER TIGHTEN - Damage may occur to the ring being held.